Electrolux PROFESSIONAL

Food Processor Stainless Steel Cutter Mixer - 11.5 LT - 2 Speeds with Microtoothed Blade, Bowl and Scraper

ITEM #

MODEL #

NAME #

SIS #

AIA #

600084 (K120S2) * NOT TRANSLATED *

Main Features

- Productivity suitable for 100-200 meals per service.
- Food processor allows fast liquidizing, mixing, mincing, chopping and pastry-making.
- Delivered with:-11.5 liter stainless steel bowl with max liquid level indication to avoid spillage-micro toothed perforated blade-scraper
- Angled perforated knives and conical base of the bowl ensure consistent mixing.
- Lid with central opening to add ingredients in mid-cycle.
- Base fixed cover for a better handling.
- Cover metal frame to ensure seal water tightness to avoid leakage.
- All parts in contact with food are removable without tools and completely dismountable.
- Pulse function to coarse chopping.

Construction

- 304 AISI stainless steel bowl with leak resistant spout and handles, easy to manage.
- Scraper with SS handle, easy to dismount.
- 2 speeds: 1500 and 3000 rpm.
- Power: 2200 watts.
- IP65 touch button control panel.
- Cover handle with double safety locking system.
- Transparent BPA free cover incorporates a magnetic safety system which stops the machine if lid is not properly closed.
- A safety device requires to press the start button to restart the machine after a power cut.
- Asynchronous silent industrial motor for heavy duty and longer life.

Included Accessories

- 1 of - NOT TRANSLATED - PNC 650059
- 1 of - NOT TRANSLATED - PNC 650060
- 1 of - NOT TRANSLATED - PNC 650073

Optional Accessories

- - NOT TRANSLATED - PNC 650059 ❑
- - NOT TRANSLATED - PNC 650060 ❑
- - NOT TRANSLATED - PNC 650073 ❑
- Stainless steel mobile stand. Height: 730 mm PNC 653017 ❑
- Serrated blade rotor for 11,5 lt cutter mixer PNC 653299 ❑
- Serrated blade rotor for meat for 11,5 lt cutter mixer PNC 653538 ❑

APPROVAL:

Electrolux PROFESSIONAL

Food Processor
Stainless Steel Cutter Mixer - 11.5 LT - 2 Speeds with Microtoothed Blade, Bowl and Scraper

Front

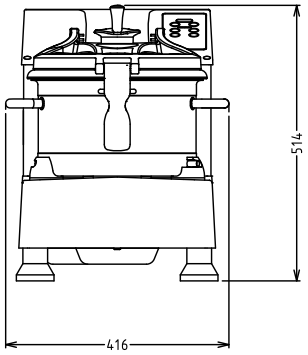

Side

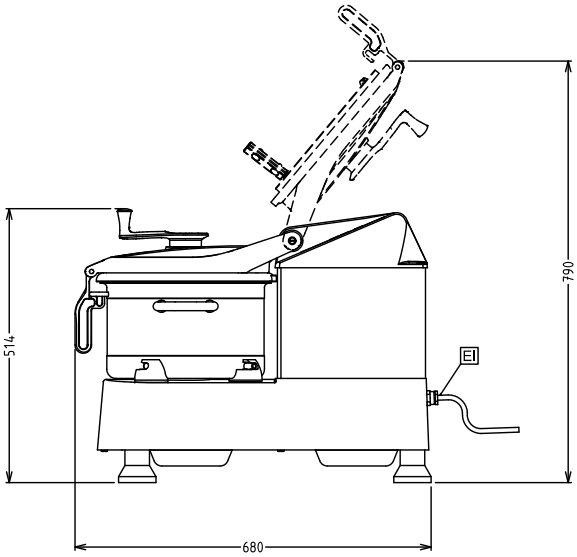

EI = Electrical inlet (power)

Top

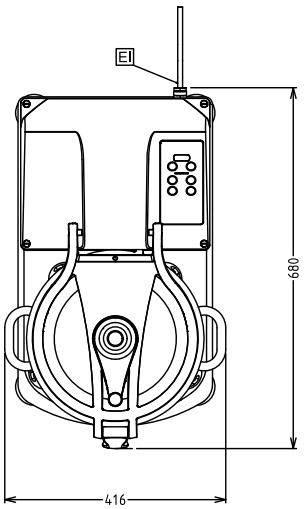

Electric

Supply voltage:	
600084 (K120S2)	380-415 V/3 ph/50 Hz
Electrical power max.:	2.2 kW
Total Watts:	2.2 kW

Capacity:

Performance (up to):	6 kg/Cycle
Capacity:	11.5 litres

Key Information:

External dimensions, Width:	416 mm
External dimensions, Depth:	680 mm
External dimensions, Height:	517 mm
Shipping weight:	68 kg

The company reserves the right to make modifications to the products without prior notice. All information correct at time of printing.